Technical data sheet

Product features

Cooking range combined with electric convection oven GN 1/1 - 6x burner 230 V / 1N		
Model	**SAP Code**	00002059
SPT 90 GLS	**A group of articles - web**	Stoves



- Device type: Combined unit
- Power consumption of the zone 1 [kW]: 4,5
- Power consumption of the zone 2 [kW]: 4,5
- Power consumption of the zone 3 [kW]: 4,5
- Power consumption of the zone 4 [kW]: 4,5
- Power consumption of the zone 5 [kW]: 4,5
- Power consumption of the zone 6 [kW]: 4,5
- Type of internal part of the appliance 1 (eg oven): Electric
- Type of internal part of the appliance 2 (eg oven): Hot air
- Protection of controls: IPX4
- Material: AISI 304 top plate, AISI 430 cladding

SAP Code	00002059	**Power consumption of the zone 2 [kW]**	4,5
Net Width [mm]	988	**Power consumption of the zone 3 [kW]**	4,5
Net Depth [mm]	609	**Power consumption of the zone 4 [kW]**	4,5
Net Height [mm]	900	**Power consumption of the zone 5 [kW]**	4,5
Net Weight [kg]	110.00	**Power consumption of the zone 6 [kW]**	4,5
Power electric [kW]	3.130	**Type of internal part of the appliance 1 (eg oven)**	Electric
Loading	230 V / 1N - 50 Hz	**Type of internal part of the appliance 2 (eg oven)**	Hot air
Power gas [kW]	27.000	**Width of internal part [mm]**	548
Type of gas	Natural gas, propane butane	**Depth of internal part [mm]**	360
Number of zones	6	**Height of internal part [mm]**	338
Power consumption of the zone 1 [kW]	4,5		

RM GASTRO, s.r.o.,
Třída Čs. armády 816,
391 81 Veselí nad Lužnicí 1, ID:49825062

Technical data sheet

Technical drawing

Cooking range combined with electric convection oven GN 1/1 - 6x burner 230 V / 1N		
Model	**SAP Code**	00002059
SPT 90 GLS	**A group of articles - web**	Stoves

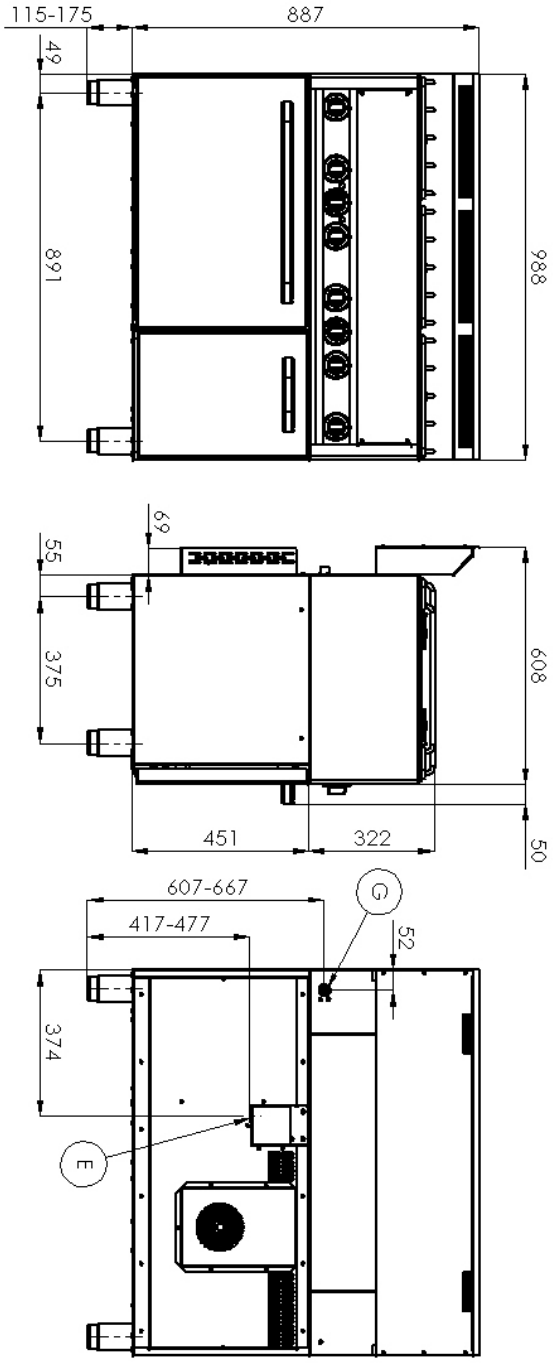

RM GASTRO, s.r.o.,
Třída Čs. armády 816,
391 81 Veselí nad Lužnicí 1, ID:49825062

Technical data sheet

Product benefits

Cooking range combined with electric convection oven GN 1/1 - 6x burner 230 V / 1N		
Model	**SAP Code**	00002059
SPT 90 GLS	**A group of articles - web**	Stoves

1 Centered high performance burners

high performance and efficiency
brass removable burners
long life
detachable

- energy saving (perfect combustion)
- time saving for food preparation
- easy maintenance/cleaning

2 Hygienic moldings of the top plate

absence of sharp corners and edges (potential places where dirt could stick)
smooth transitions

- easy quick cleaning

3 Hot air oven

hot air baking
high capacity and variability
all-stainless design

- suitable for meat, fish, baked pasta, white meat, sweet pastries
- long service life
- easy to clean

4 Degree of protection of the control elements IPX4

maintenance-free system
resistance to splash water
long life

- savings on service interventions
- greater job security for staff

5 All stainless steel design

long life
resistance of AISI 304 stainless steel material
the material does not cut

- savings on service interventions
- easy cleaning and maintenance of equipment

6 Safety element – thermocouple

safe service for staff
there is no unnecessary gas leakage
long life

- savings on service interventions
- easier and faster operation

7 Removable basin under the burners

removable top plate without tools

- easier cleaning
- dishwasher safe
- easier servicing

RM GASTRO, s.r.o.,
Třída Čs. armády 816,
391 81 Veselí nad Lužnicí 1, ID:49825062

Technical data sheet

Technical parameters

Cooking range combined with electric convection oven GN 1/1 - 6x burner 230 V / 1N		
Model	**SAP Code**	00002059
SPT 90 GLS	**A group of articles - web**	Stoves

1. **SAP Code:**
   00002059
2. **Net Width [mm]:**
   988
3. **Net Depth [mm]:**
   609
4. **Net Height [mm]:**
   900
5. **Net Weight [kg]:**
   110.00
6. **Gross Width [mm]:**
   705
7. **Gross depth [mm]:**
   1055
8. **Gross Height [mm]:**
   1120
9. **Gross Weight [kg]:**
   115.00
10. **Device type:**
    Combined unit
11. **Construction type of device:**
    With substructure
12. **Power electric [kW]:**
    3.130
13. **Loading:**
    230 V / 1N - 50 Hz
14. **Power gas [kW]:**
    27.000
15. **Type of gas:**
    Natural gas, propane butane
16. **Protection of controls:**
    IPX4
17. **Material:**
    AISI 304 top plate, AISI 430 cladding
18. **Indicators:**
    running and heating the oven
19. **Worktop material:**
    AISI 304
20. **Worktop Thickness [mm]:**
    0.80
21. **Number of zones:**
    6
22. **Power consumption of the zone 1 [kW]:**
    4,5
23. **Power consumption of the zone 2 [kW]:**
    4,5
24. **Power consumption of the zone 3 [kW]:**
    4,5
25. **Power consumption of the zone 4 [kW]:**
    4,5
26. **Power consumption of the zone 5 [kW]:**
    4,5
27. **Power consumption of the zone 6 [kW]:**
    4,5
28. **Number of power control stages:**
    6

RM GASTRO, s.r.o.,
Třída Čs. armády 816,
391 81 Veselí nad Lužnicí 1, ID:49825062

Technical data sheet

Technical parameters

Cooking range combined with electric convection oven GN 1/1 - 6x burner 230 V / 1N		
Model	**SAP Code**	00002059
SPT 90 GLS	**A group of articles - web**	Stoves

29. Safety thermostat up to x ° C:
360

30. Adjustable feet:
Yes

31. Number of burners/hot plates:
6

32. Type of gas cooking zones:
Brass burners

33. Oven Type:
electric hot air

34. Type of internal part of the appliance 1 (eg oven):
Electric

35. Type of internal part of the appliance 2 (eg oven):
Hot air

36. Width of internal part [mm]:
548

37. Depth of internal part [mm]:
360

38. Height of internal part [mm]:
338

39. Maximum temperature of the inner chamber [°C]:
300

40. Minimum temperature of the inner chamber [°C]:
50

41. Connection to a ball valve:
1/2

42. Cross-section of conductors CU [mm²]:
0,75

RM GASTRO, s.r.o.,
Třída Čs. armády 816,
391 81 Veselí nad Lužnicí 1, ID:49825062